Riga, Tallinn 17-18 okt.

Timber building systems in Sweden

Anders Gustafsson, SP Trätek

SP Wood Technology

SP Vision

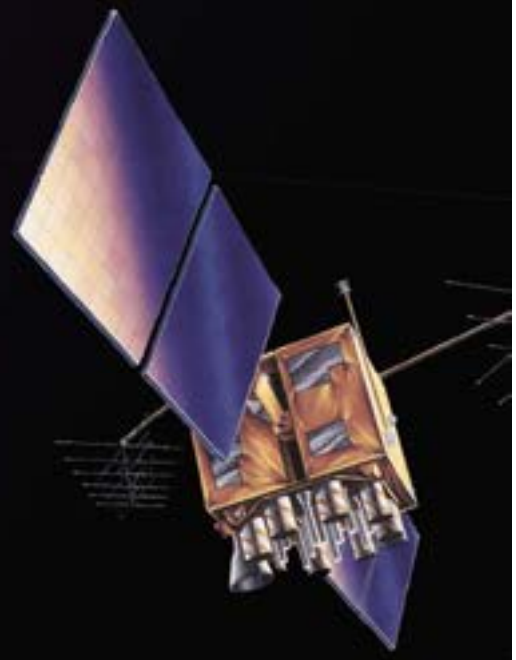

A leading international research and technology organisation of key importance for competitive industry and sustainable development in society.

From research and testing to application and use

– making ideas work

SP Swedish Testing and Research Institute

Organisation

Building Technology and Mechanics

- Materials
- Construction
- Wood Technology
- Solid Mechanics
- Computer Simulation
- Transport

Chemistry and Materials Technology

- Materials Analyses
- Environmental Analyses
- Measurement Technology
- Plastics and Rubber
- Surface Protection
- Lifetime Technology
- Biotechnology

Energy Technology

- HVAC
- Combustion Technology
- Building Physics
- Acoustics

Fire Technology

- Reaction to Fire
- Fire Resistance
- Fire Protection

Electronics

- Product Safety
- Software
- EMC

Measurement Technology

- National Metrology
- Measurement Processes, Sensor Technology
- Calibration

Weights and Measures

- Verification Office
- Field Calibration

Certification

- Products
- Management Systems

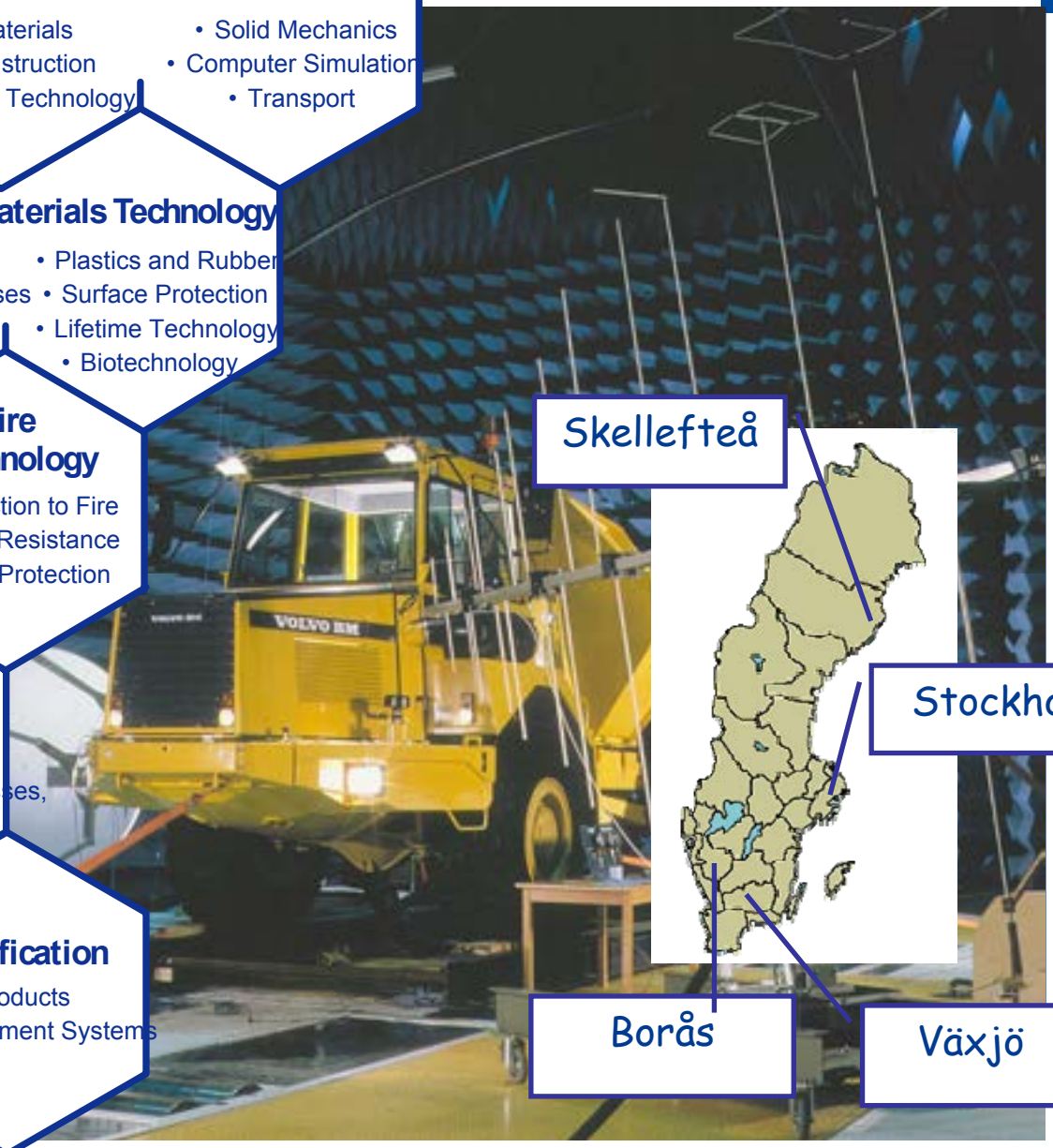

SP Swedish Testing and Research Institute

Focus areas for research

- building and properties
- energy
- fire and protection
- materials technology
- transportation and vehicles
- electronics
- measurement technology

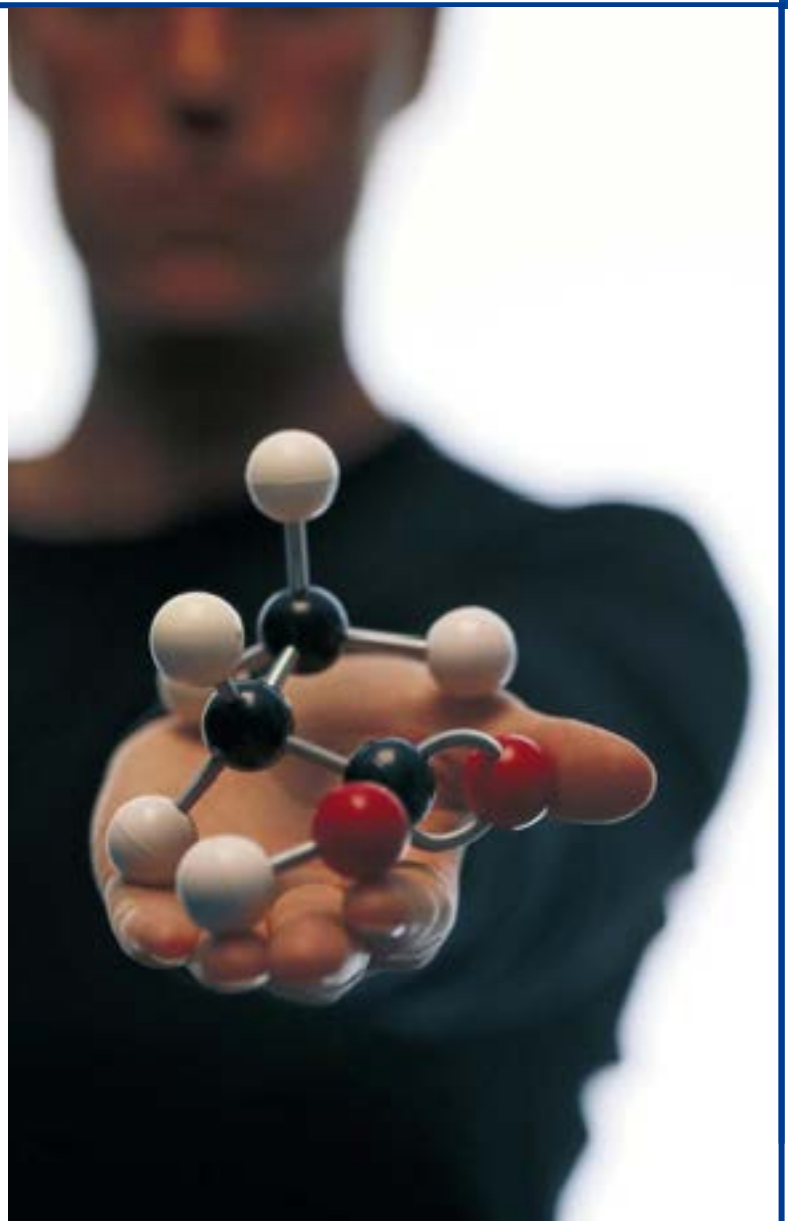

OUTLINE

Timber constructions,
different systems in Sweden

- Production methods
- Code regulations
- Key issues, structural design, acoustics, fire resistance
- Examples

Background

-Log house
-New code
1994

Singel family house in Sweden today

Timber frame building systems

Wall and floor units shall provide this functions:

- Transfer of vertical loads
- Stabilisation for windloads
- Physical separation
- Heat insulation
- Sound insulation
- Fire separation

Multi-storey buildings

- More complex because of:
  - Stability
  - Fire safety
  - Acoustics
  - Moisture protection
  - Air tightness
  - Construction methods

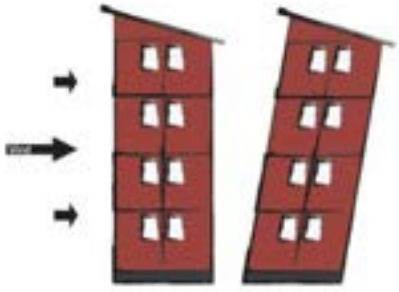

Acoustic

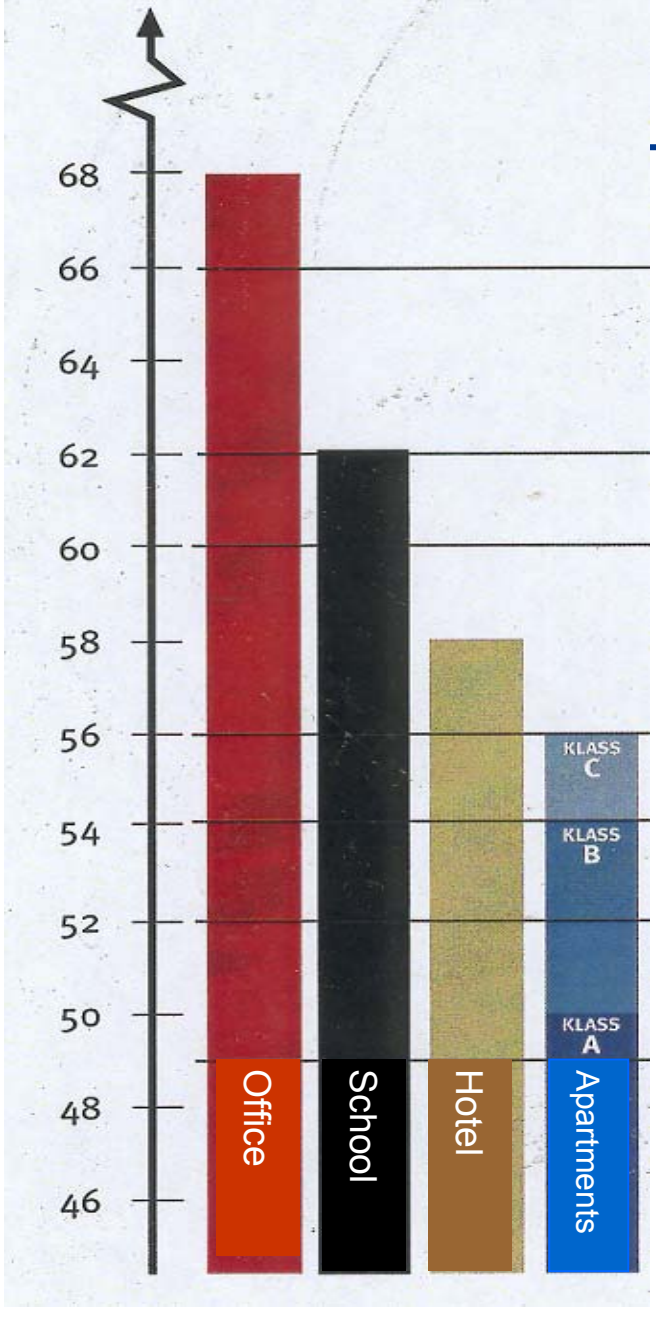

Impact sound insulation
<58 dB - 50 dB

Office
School
Hotel
Apartments

Airborne sound insulation > 53 db - 60 dB

Flanking sound

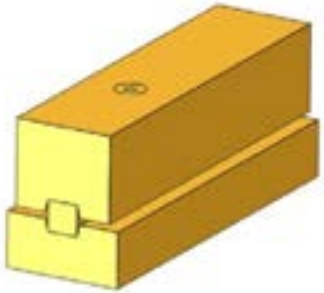

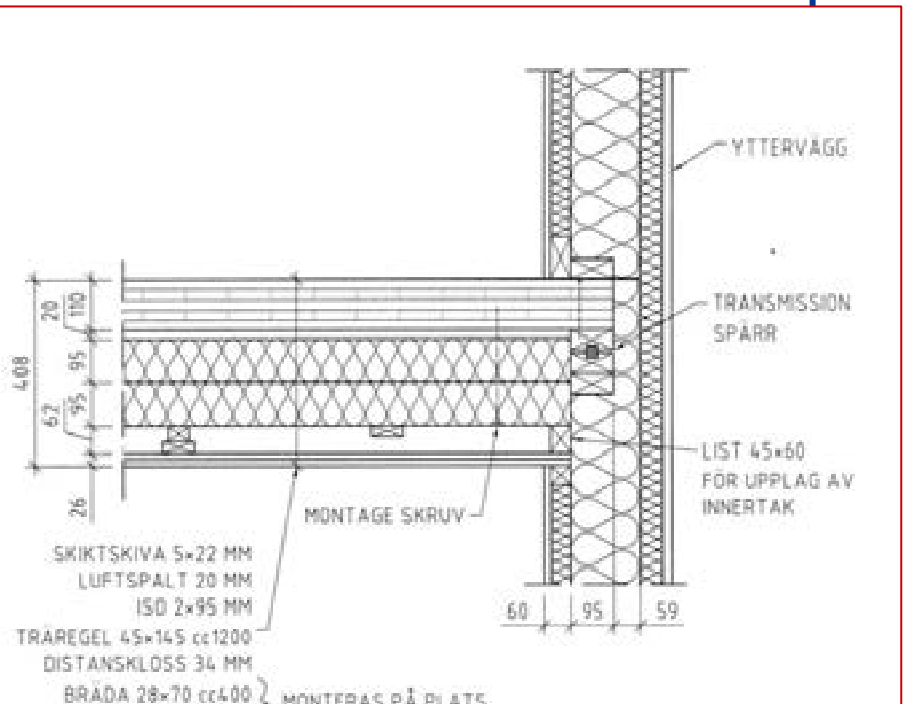

Fire resistance requirements

	1-2 storeys	3-4 storeys	5-8 storeys
Stabilising structures	R30	R60	R90
Other structures	-	R60	R90
Separating structures	(EI30)	EI60	EI90

R= load bearing, E=integrity, I=insulation

Stability

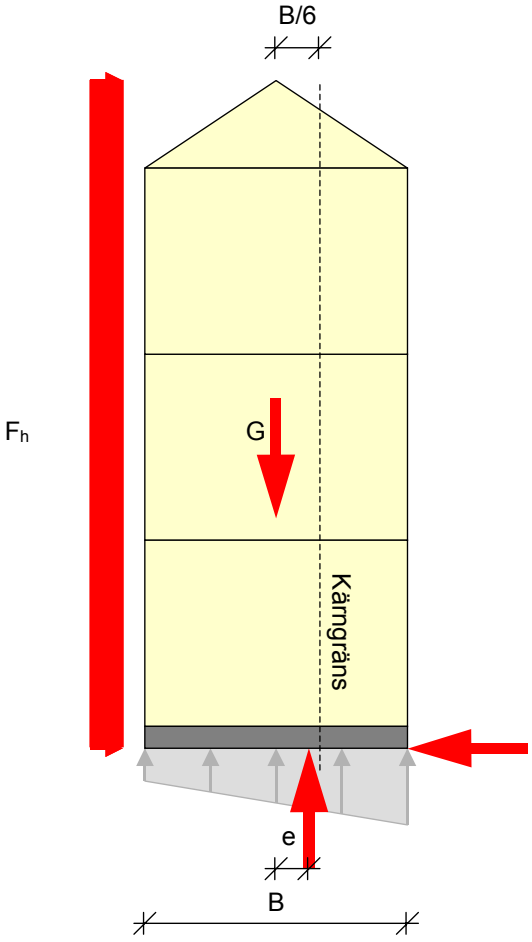

Resistance to overturning
Lateral stability

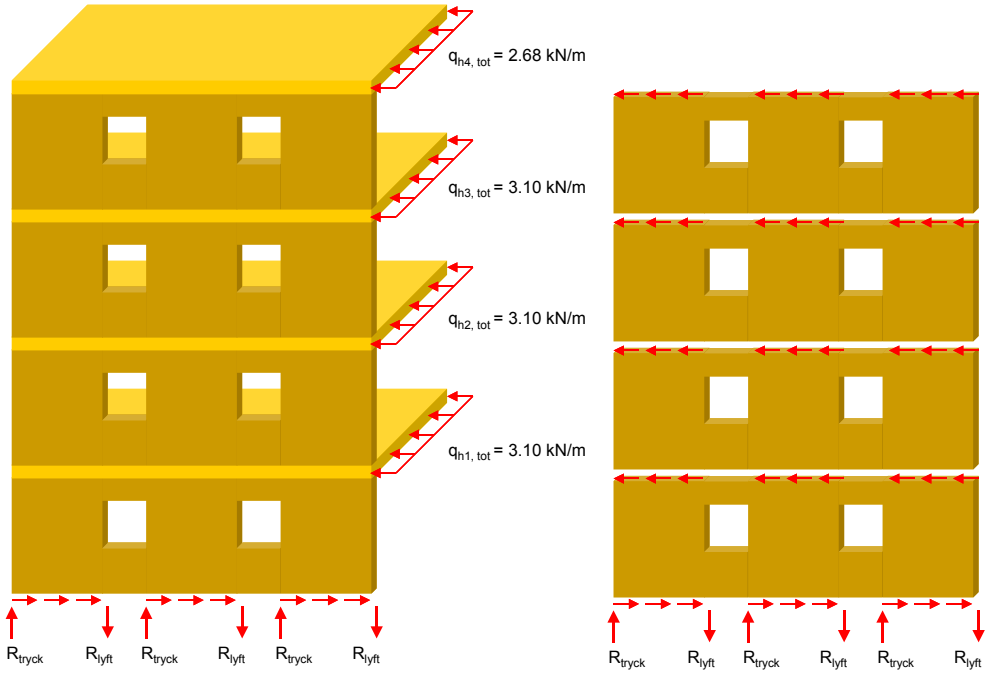

Hold-down connections for prefabricated elements

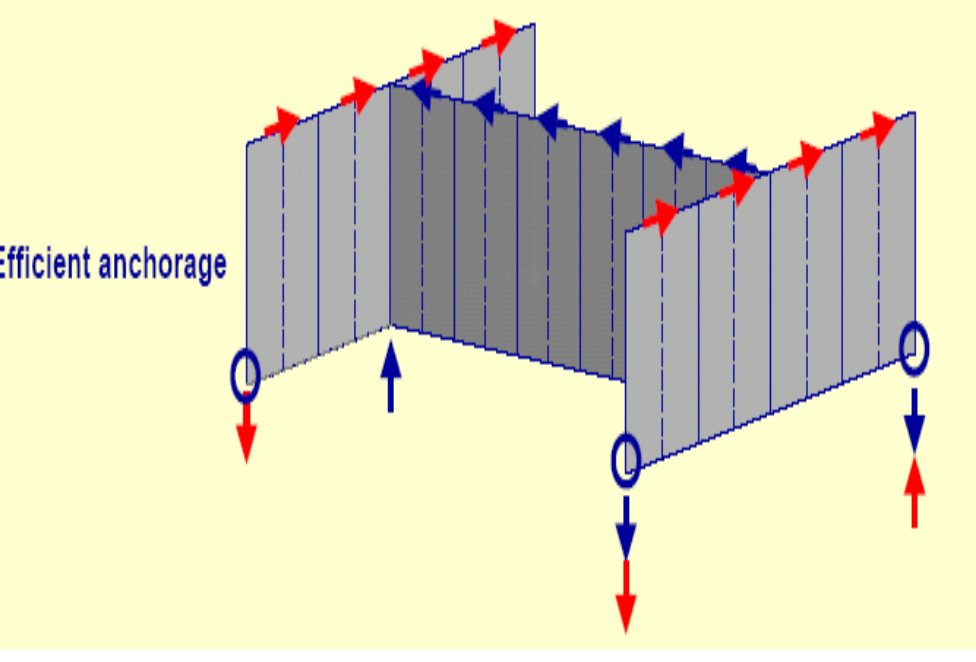

Consideration, structural design

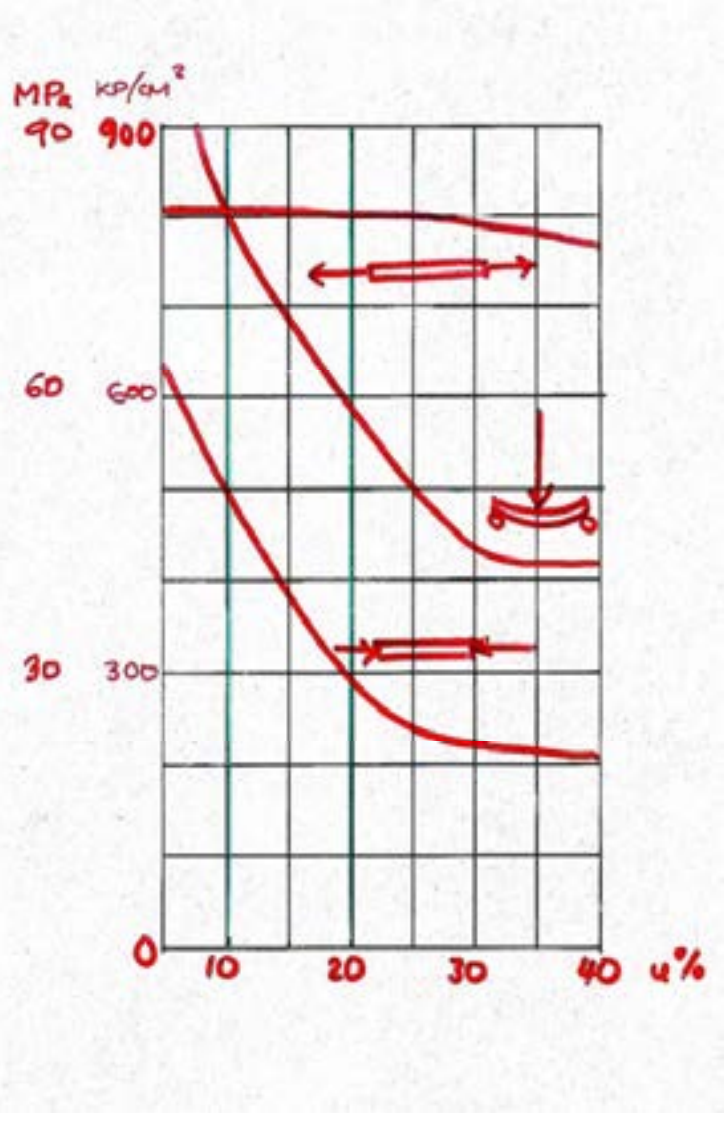

Moisture content

Stress graded timber

Timber systems

-Timber frame system

- Solid Wood systems

- Post and beam

Timber frame

High degree of prefabrication

Factory made deckings

Factory made walls

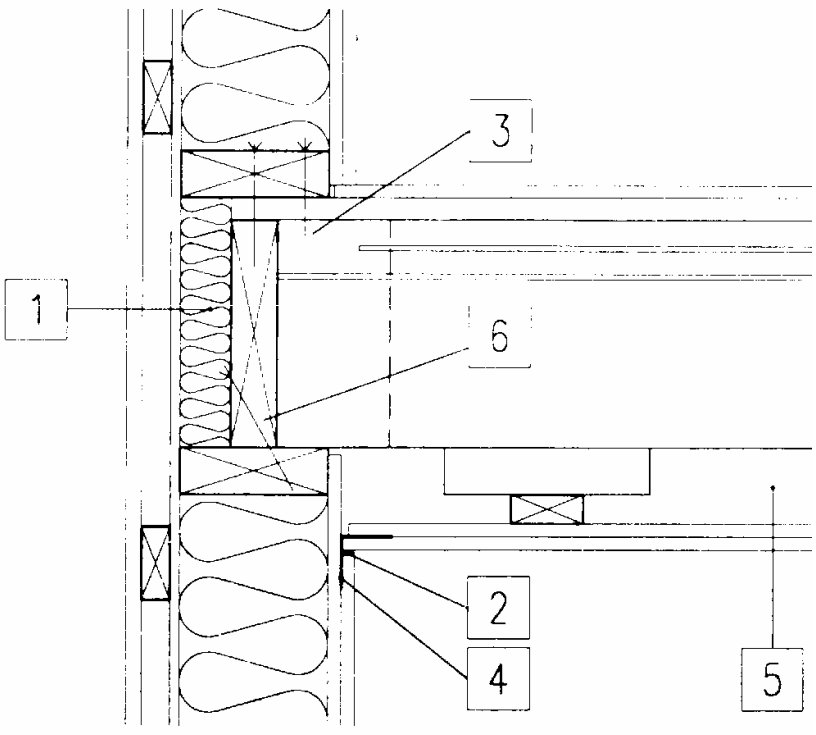

1) 50 mm Mineral wool

2) Gypsum board

3) Joist 45x220

4) H50/50

5) Space for services

Ceiling: Chipboard V313 13+22

Wall-floor joints

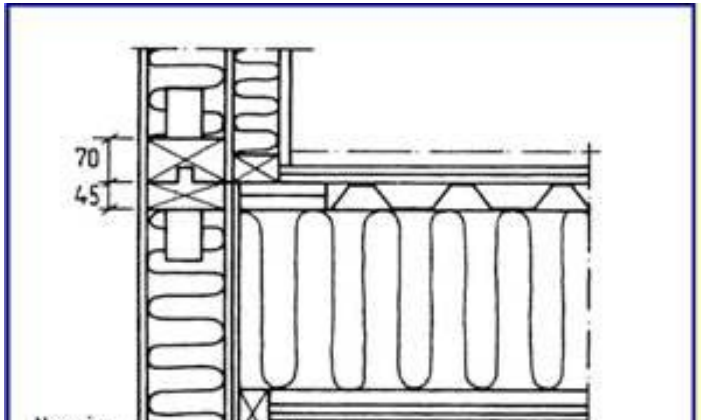

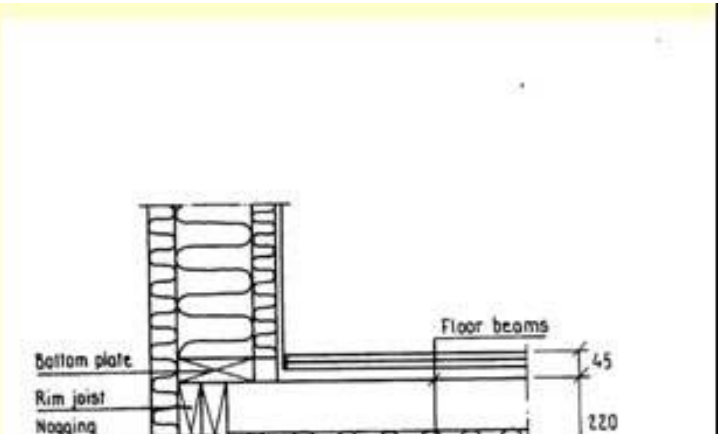

Orgelbänken, Linköping

Massive timber system - Solid Wood

Massive timber
Decking of massive timber
Walls of massive timber

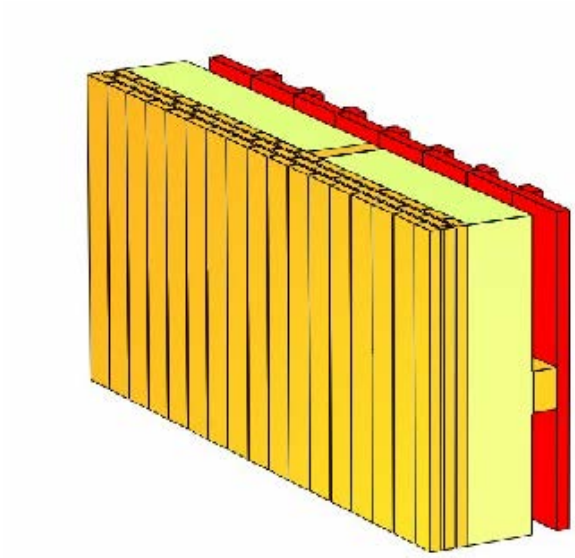

Plates of massive timber

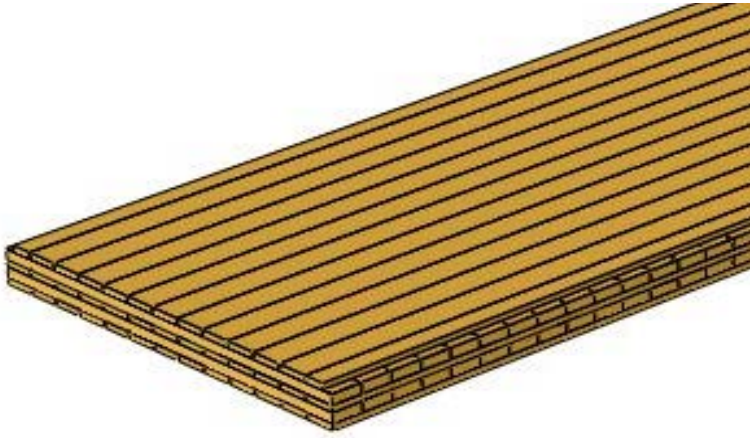

Cross-laminated plates

Prestressed or glued laminated plates

Glulambeams and cross-laminated timber plates

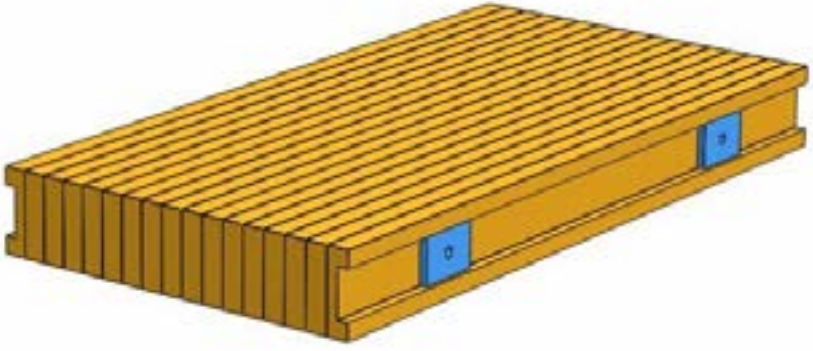

Post and beam systems

Universeum, Gothenburg

Plogen, Umeå

Haber area, Sundsvall

- 5 six storey high houses
- Solid wood system
- 94 apartments, 8600 m²

Fundation

Piles

34 concrete piles/house

Slab

160 mm concrete
70 mm insulation
150 mm gravel

SP Swedish Testing and Research Institute

Plan 1-6, Solid wood system

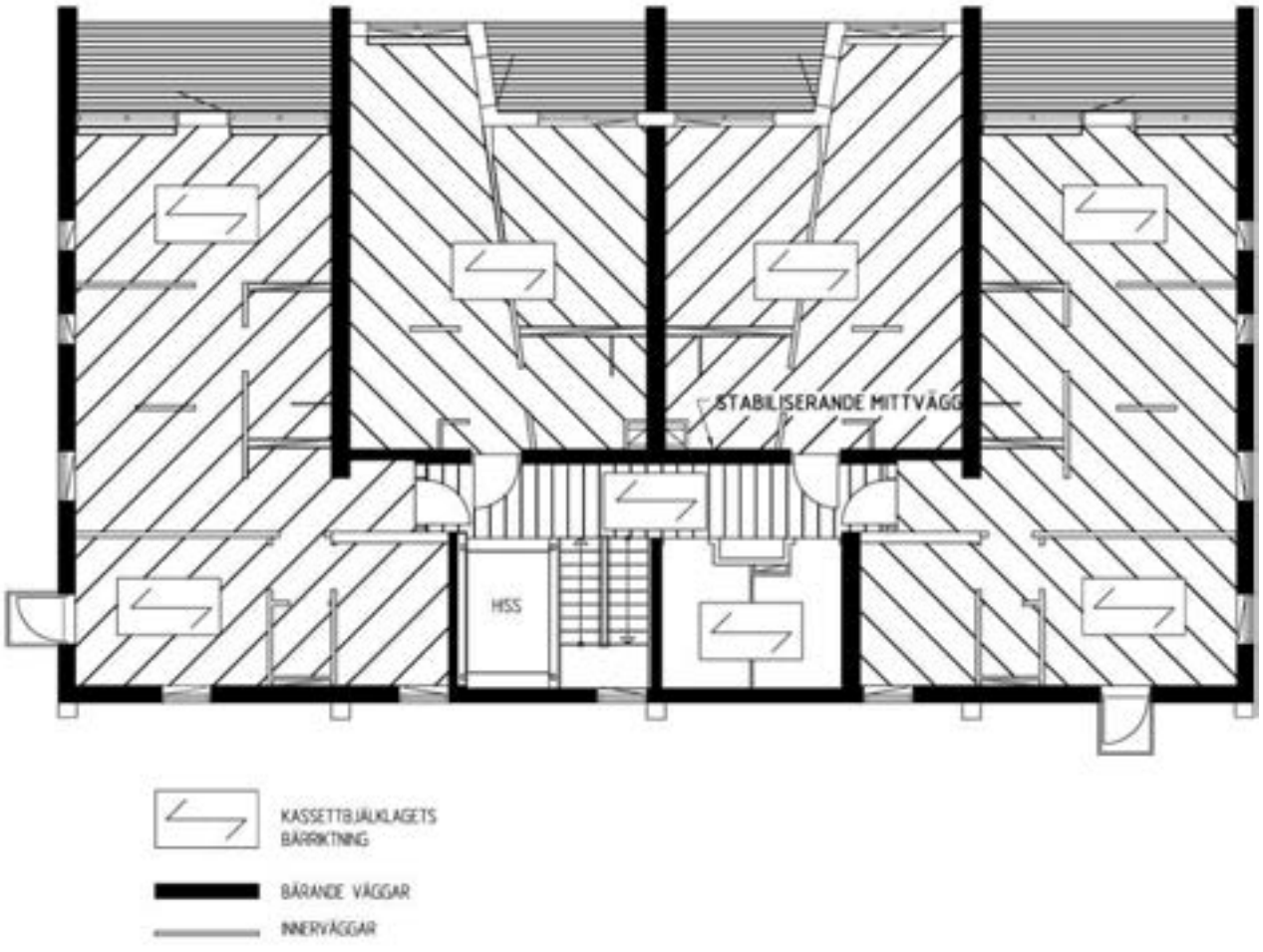

Floors

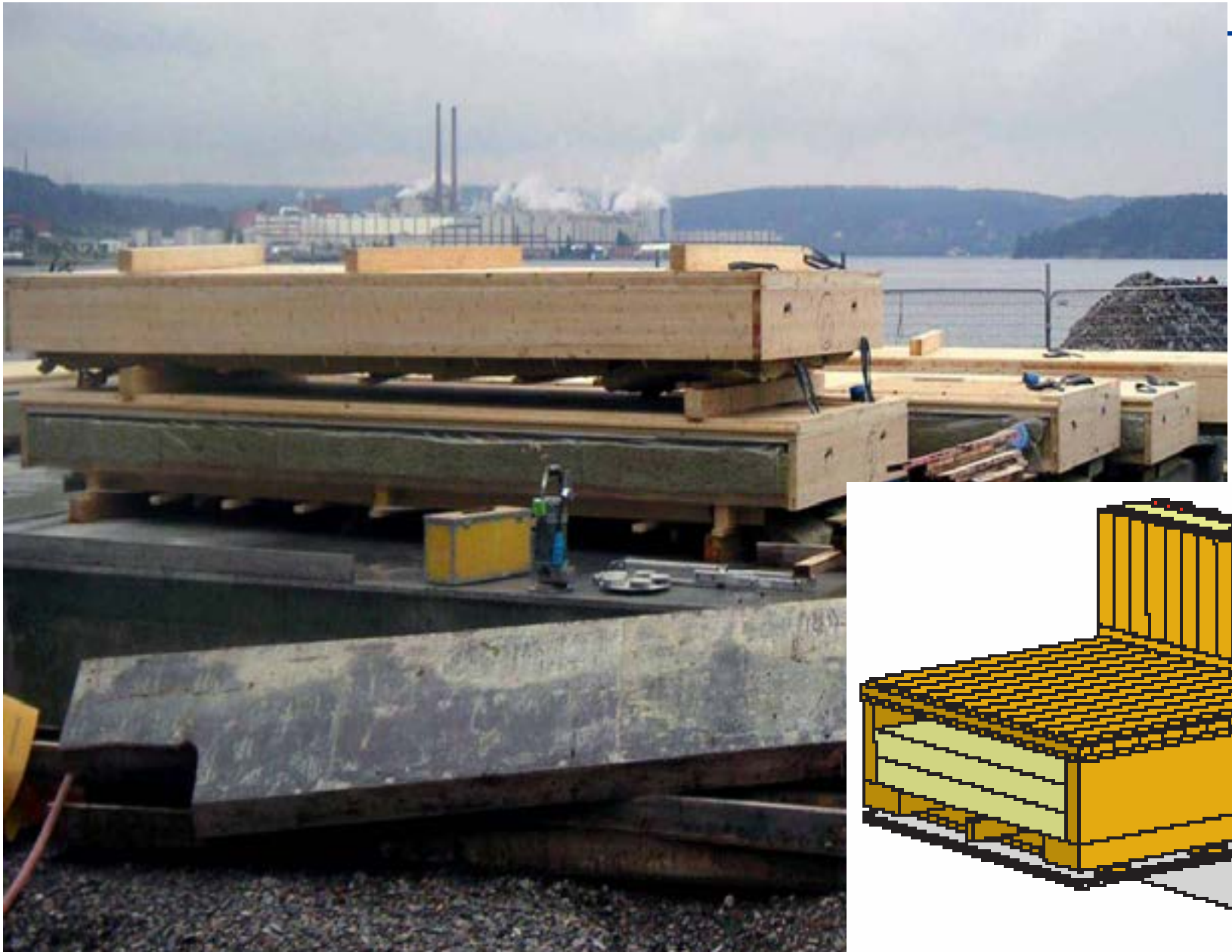

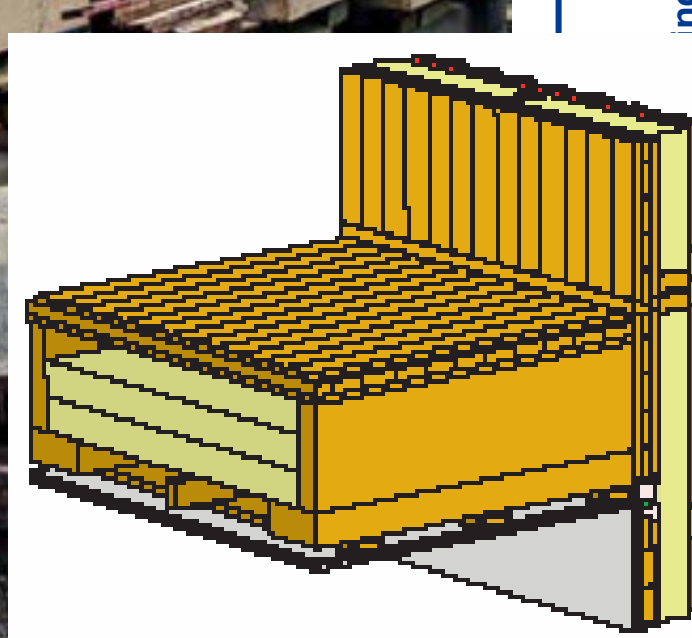

Walls

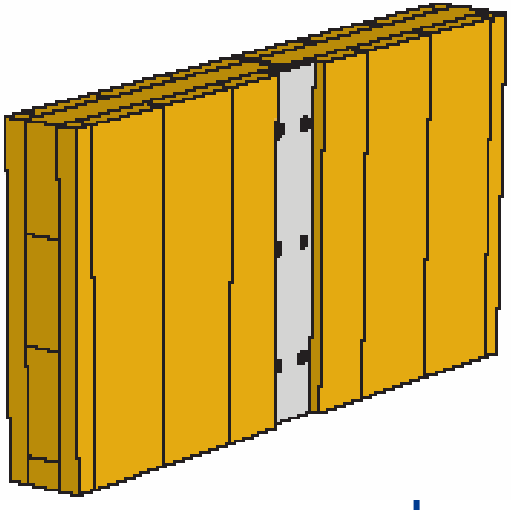

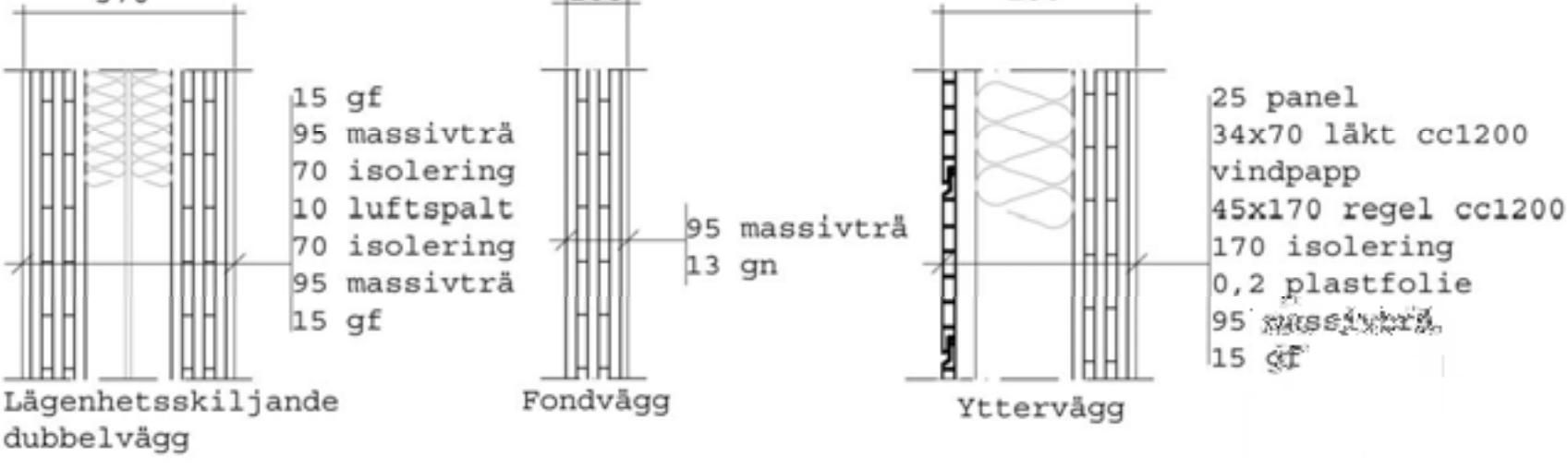

Fire saftey

- Residential sprinkler system
- Wooden fasad
- Inside, gypsum board
- 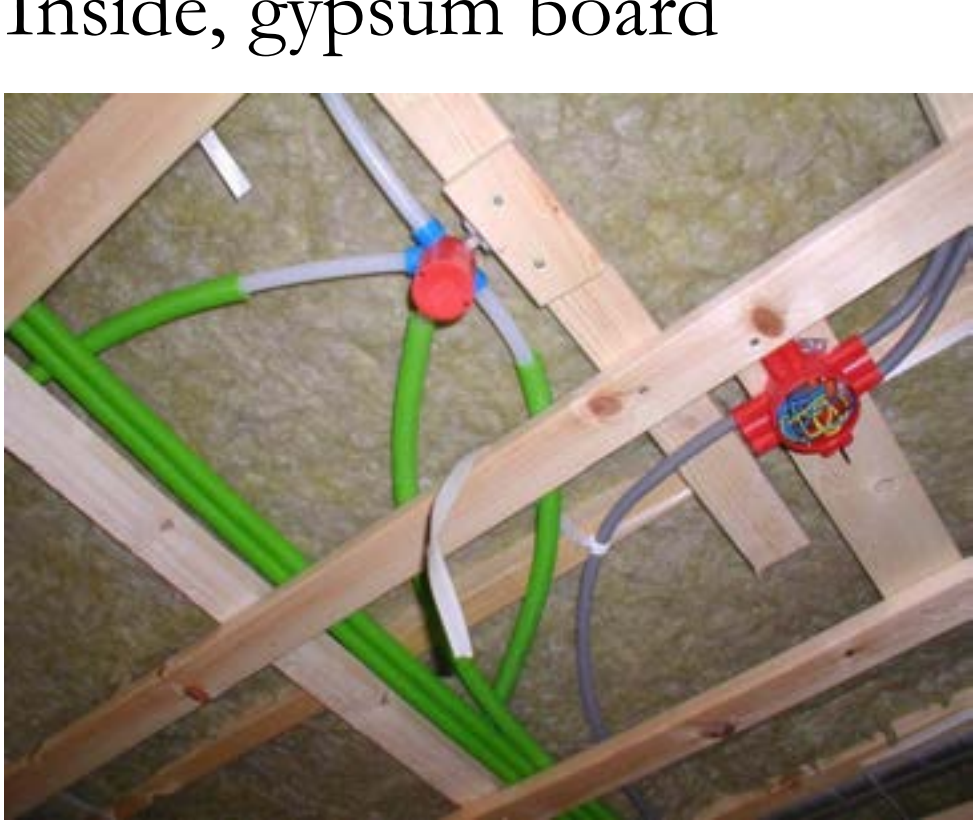

Roof

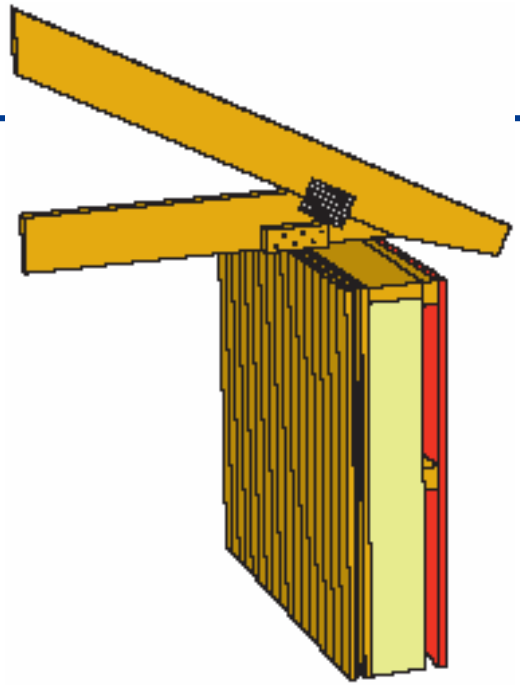

Weather protektion system

Result

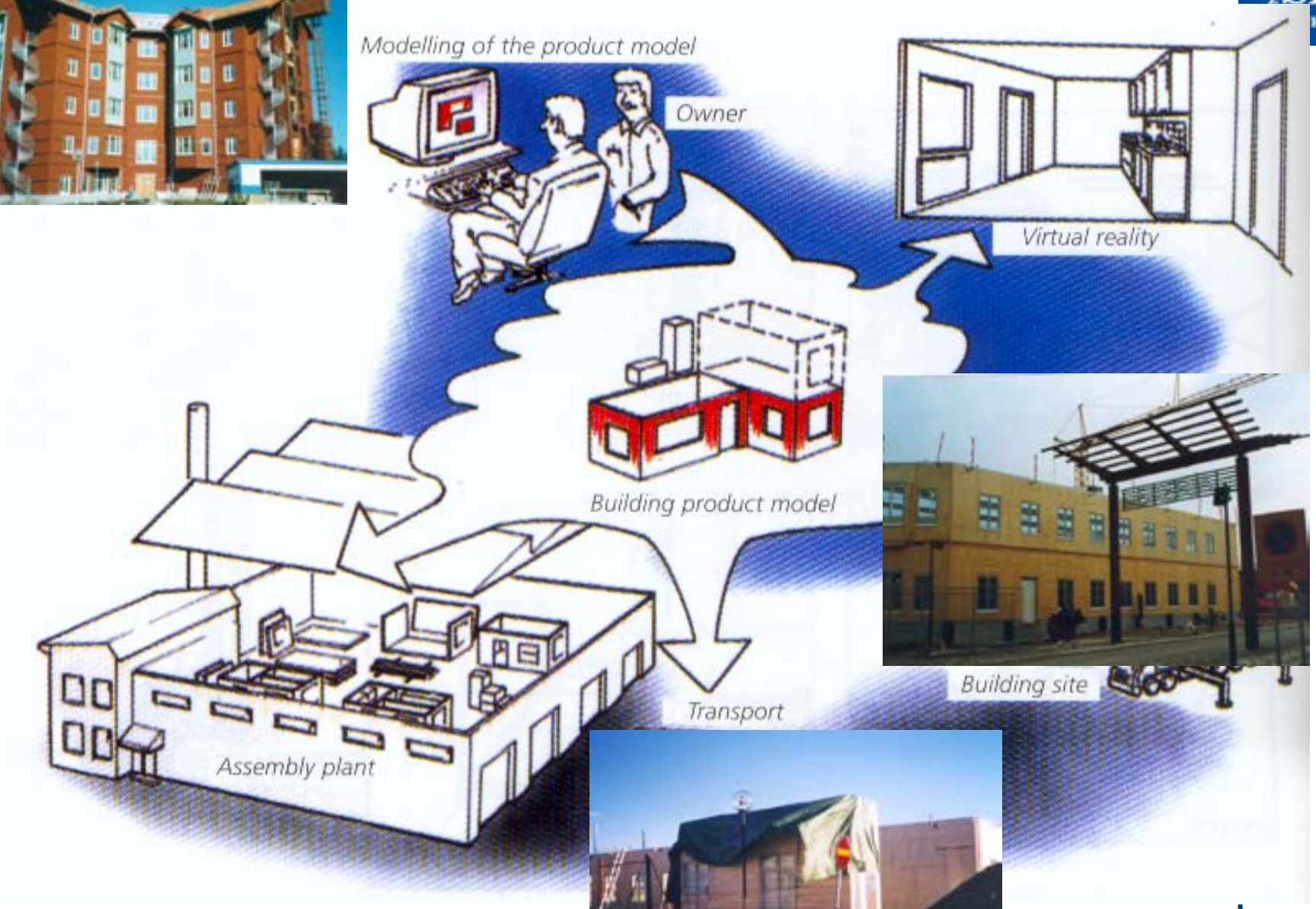

SP Swedish Testing and Research Institute

Production economy

-No signifikant profit in direct structural costs

- Higher potential, prefabrication

- Still in learning phase